1/2" FIP X 3/4" MALE HOSE THREAD BALL VALVE W/HOSE CAP & CHAIN LEAD FREE



TECHNICAL DATA

DESCRIPTION:
1/2" Fip X 3/4" Male Hose Thread Ball Valve W/Hose Cap&Chain Lead Free

CONSTRUCTION:
Lead Free Brass Body, Stem and Cap, A3 Steel Handle Steel Nuts, PTFE Liner and Seals. NBR Gasket

FINISH:
Forged Brass finish

CODE APPROVALS:
CSA Listed. Complies w/ NSF-61, NSF-372

PACKAGING:
Inner carton: 10
Master carton: 100

PART#	DESCRIPTION	FINISH
BV-FIP-MHT-12	1/2" Fip X 3/4" Male Hose Thread Ball Valve W/Hose Cap&Chain Lead Free	FORGED

Country of origin: China

ROUGH IN DRAWING

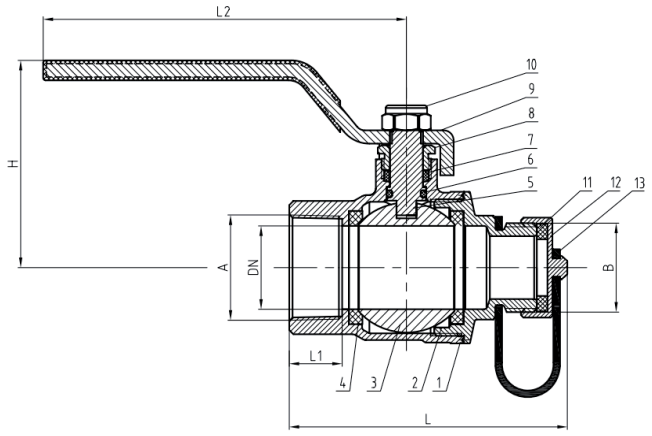

1/2"FIP x3/4"MNH	1/2"-14NPT	3/4"NH-11.5	Φ14.5	67.5	13	90	50
SIZE	A	B	DN	L	L1	L2	H

No.	Name	Material	Qty
13	Tie	LLDPE	1
12	3/4"NH-Drain Cap	C38500	1
11	Drain Cap Gasket	NBR	1
10	Nuts	SUS304	1
9	Handle	A3	1
8	Pressed Cap	C38500	1
7	Liner	PTFE	1
6	O-ring	EPDM	1
5	Stem	C38500	1
4	Seals	PTFE	2
3	Valve Ball	C38500	1
2	Bonnet	C38500	1
1	Body	C38500	1

ALL DIMENSIONS SHOWN ARE NOMINAL

Meets requirements for NSF-61, NSF-372