Specification

Plastic Bell Cleanout Cover



#COC-PB-4-C



#COC-PB-5

Features

ABS Construction

#14 Wood Screw Included

Bell Design

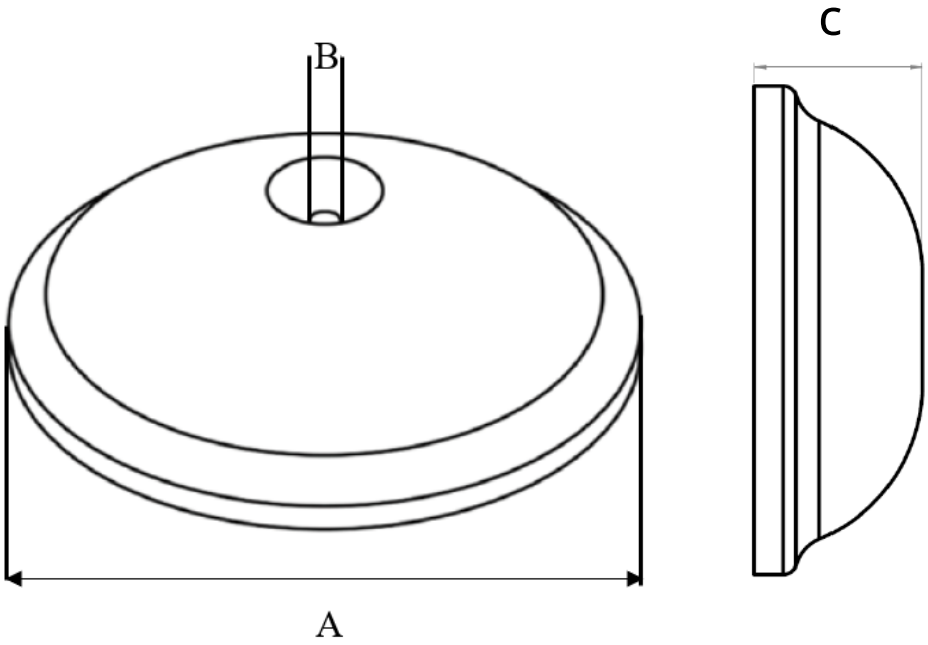

Unit: inches

Model#	Description	A	B	C
COC-PB-4-C	4-1/4" Cleanout Cover Plate, Bell Design,w/ Screw, Chrome	4.28	0.30	1.49

Model#	Description	A	B	C
COC-PB-5	5-1/4" Cleanout Cover Plate, Bell Design, w/ Screw, White	5.37	0.30	1.49
COC-PB-7	7-1/4" Cleanout Cover Plate, Bell Design, w/ Screw, White	7.37	0.30	1.57