LOOSE KEY ANGLE STOP
MULTI TURN



TECHNICAL DATA

DESCRIPTION:
1/2" (5/8" OD) X 3/8" Comp. Angle Stop Multi Turn with Loose Key Hex Body

CONSTRUCTION:
Solid Brass Body and Brass Stem, Removable Handle, Compression Nut, Gasket

FINISH:
Chrome Plated finish

CODE APPROVALS:
UPC approved. Complies w/ NSF-61

PACKAGING:
Color Box w/ Barcode
Inner carton: 20
Master carton: 80

PART#	DESCRIPTION
AS-COM-MT-LK	1/2" (5/8" OD) X 3/8" Comp. Angle Stop Multi Turn with Loose Key Hex Body

Country of origin: China

ROUGH IN DRAWING

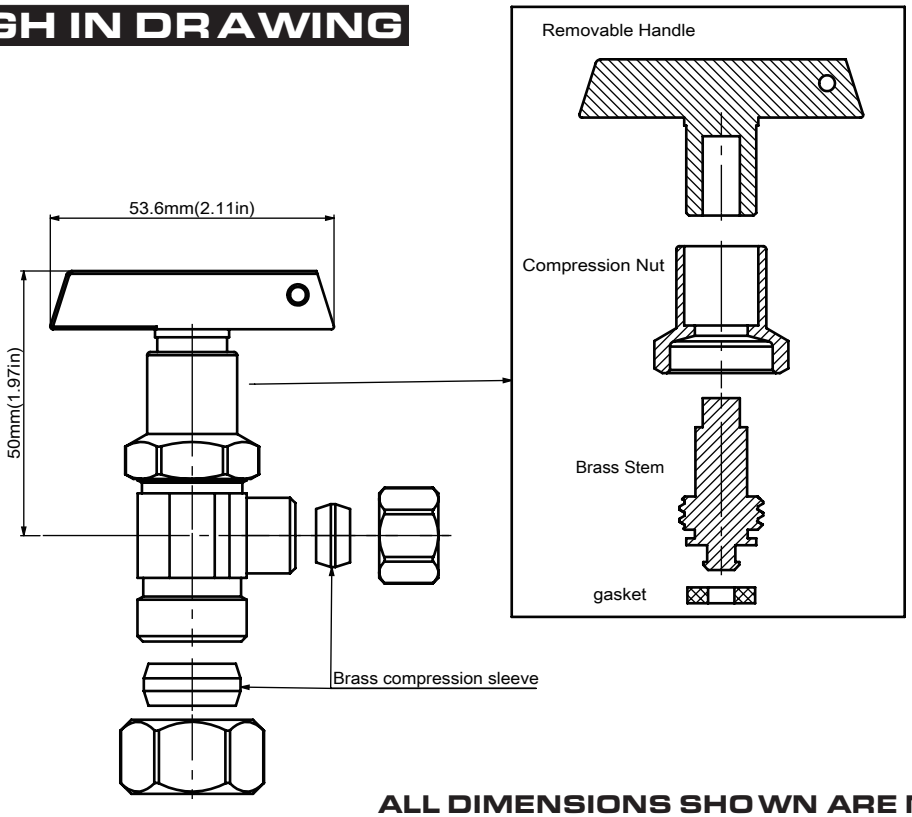

ALL DIMENSIONS SHOWN ARE NOMINAL

Meets requirements for NSF-61
Approved